Detectors

passive infrared receiver

KX18DC

only available in the UK

INDUSTRIAL / COMMERCIAL / RESIDENTIAL

18m Blue Wave Technology Curtain PIR Detector

Main Features

- Solid Vertical Curtain Detector
- Dual Element Pyro-electric Sensor
- Selectable EOL (End Of Line) Resistors
- Vertical Curtain Coverage up to 18m
- Long Range Coverage up to 30m
- Patented Independent Floating Thresholds (IFT)
- Adjustable sensitivity settings
- Digital Temperature Compensation
- Selectable NO or NC Relay
- Multi-Angular LED Indication
- Sealed Optics
- Tamper Proof Brackets Included
- ABS Plastics

Product Features

Features	Description	Benefits
Solid Vertical Curtain Detection	Ensures solid vertical curtain coverage.	Ideal for protecting areas such as windows, doors or ceilings.
Blue Wave Technology (BWT)	The very latest technological development from Pyronix.	See reverse for more detailed information
Selectable EOL Resistors	The KX18DC incorporates selectable alarm resistor values of 6K8, 5K6, 4K7 &1K & tamper values of 5K6, 4K7, 2K2 and 1K catering for most control panels on the market.	Completely eliminates the need for separate resistors , therefore reducing
Patented Independent Floating Thresholds (IFT)	This technology patented by Pyronix allows the detector to respond to the environmental changes by automatically adjusting its levels of immunity to background disturbances.	installation time. Greater stability, reduces risk of false alarm
Adjustable sensitivity settings	Higher sensitivity for use in areas where fast detection is required. Adjustable sensitivity settings for installations in a more hostile environment.	activations Ensures suitability for most environments
Digital Temperature Compensation	When the product is used in a hot environment this technology digitally adjusts the detectors sensitivity allowing it to retain its range even when the external temperature equals the external body temperature of 32°C	Guarantees optimum performance at all times
Selectable NO or NC Relay	The solid state relay can be selected as Normally Open (NO) or Normally Closed (NC)	Ideal for switching electrical devices
Tamper Proof Brackets	Supplied with both wall & ceiling mount brackets which provides access for up to two 8 core cables (Tamper kit optional)	Allows ease of installation whilst enhancing tamper protection
Multi-angular LED Indication	A clear plastic pipe channels the light from the LED to the face of the detector making the LED indication highly visible from a multitude of angles.	Enables walk testing to be undertaken with ease and accuracy ensuring the detector covers the desired area.
Sealed Optics	Protects from possible infestation from insects, shields air movement in front of the pyro-electric sensor & protects against adverse reflections from inside the detector housing.	Enhances the focus of the pyro-electric sensor
ABS Plastics	3mm polished finish, reduces electrostatic interference on the PIR sensor.	Easy to clean, retains white finish.

Lens Coverage

Supplied

18m Vertical Curtain

HORIZONTAL COVERAGE

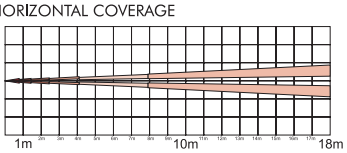

VERTICAL COVERAGE

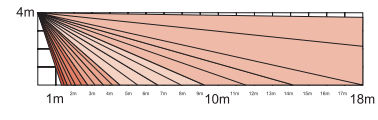

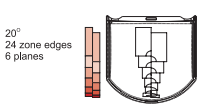

30m Long Range

HORIZONTAL COVERAGE

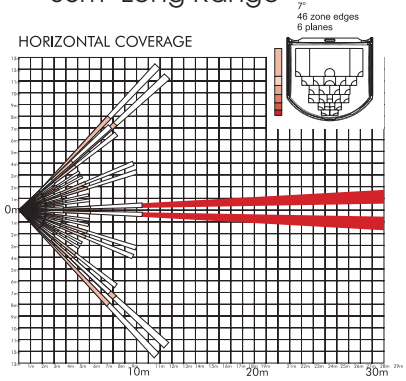

VERTICAL COVERAGE

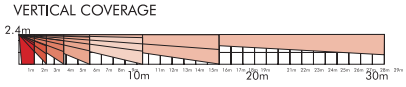

Maximum mounting height for long range lense is 2.4 m

Detectors

Pyronix Dual Element

The KX18DC has a pyro-electric sensor containing two sensing elements and when projected through a lens form zones as illustrated on the right. In order for an alarm to be triggered one or more of these zones would need to be crossed.

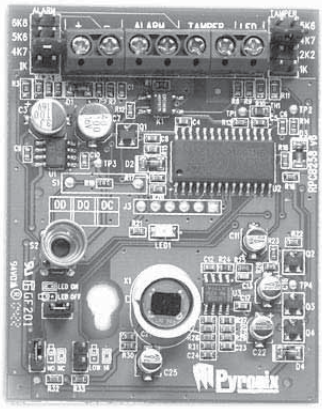

Technical Specification

ELECTRICAL	
Operating Voltage	9 - 16VDC (12V nominal)
Current Consumption - No Alarm State	12mA (12V nominal)
Current Consumption - Alarm State	11mA (12V nominal)
Relay	Solid State
Relay Output	60VDC, 50mA, Protected
Tamper Switch	12V max, 50mA max
RFI Immunity to Continuous Wave (CW) 80-2000MHz	75V/m
RFI Immunity to Amplitude Modulation (AM) 80-2000MHz	25 V/m
RFI Immunity to Pulse Modulation (PM) 80-2000MHz	25 V/m

OPERATING FEATURES	
Alarm period of	2.5 seconds
Detection Speed	0.3 - 3m/s
Operating Temperature	-30°C to +70°C
Storage Temperature	-40°C to +80°C

OPTICAL	
White Light Filter	6500 Lux
Optics	Sealed
Lens	3 Dimensional
Protection	Ultraviolet Light Filter

MOUNTING	
Optimum Coverage Height	1.8-2.4m

Weights & Dimensions

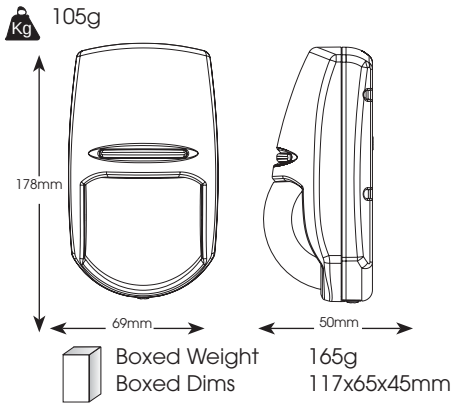

Applications

Features	Applications
Vertical Curtain Detector	This detector can be mounted to provide vertical curtain coverage to protect doors or windows and offers excellent perimeter protection. It is ideal for use in environments where a window needs to be protected, but the remainder of the room may be in use
Selectable NO or NC Relay	The solid state relay can be selected as normally open (NO) or normally closed (NC), the KX18DC is the ideal choice for applications such as switching CCTV cameras.

Vertical Curtain

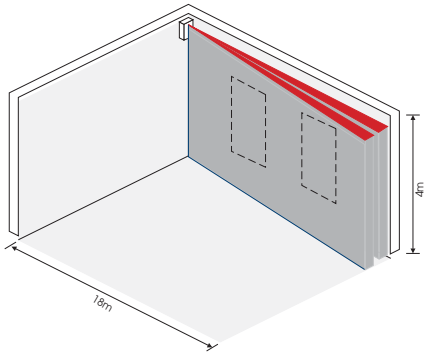

Corridor (Long Range)

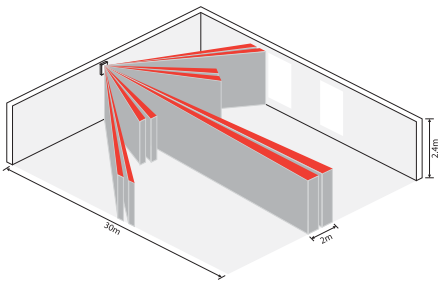

Brackets

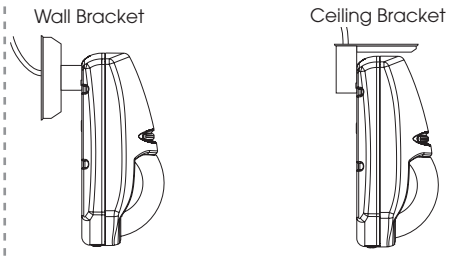

COMPLIANCE	PYRONIX PRODUCT CODE
Europe CE	FPKX18DC

PACKING INFORMATION		ACCESSORIES	PYRONIX PRODUCT CODE
Min Pack:	10	K-TAMPER	FP16310
Pack Weight:	1.65kg		
Warranty:	5 Years		
Manufactured:	UK		

For use in EN50131-1 Systems - Environmental Class 2 Security Grade 2

As part of the continued development programme
specifications may change.

Matrix, PCX, Sterling, Vocaliser, KX, Colt, ME, Magnum, Kudos, Octopus,
Eclipse, Veritec, Break Glass 2000, Twin Alert, Belle and Decibell are all
trade marks of Pyronix Ltd